MOEN® 摩恩

Specifications

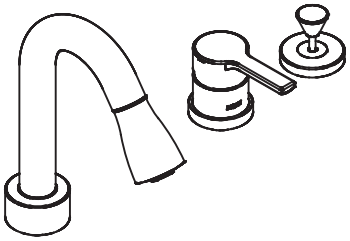

Kerry Series

Pullout Lavatory Faucet

MODELS : GN89121 series

DESCRIPTION
- Metal construction with various finishes identified by suffix
- G1/2 inlet connections and quick connector for outlet flexible hose
- Includes rope type waste assembly
- Includes 600mm flexible inlet hoses

OPERATION
- Lever style handle
- Pull-on / Push-off
- Temperature controlled through 100 degree arc by handle travel
- 100mm Lift up / push down spout design

FLOW
- Water flowrate is about 3.0L/min to 4.5L/min at 0.1Mpa
- Water flow difference is limited to 3.0L/min maximum from 0.1Mpa to 0.3 Mpa

CARTRIDGE
- Duralast cartridge design

STANDARDS
- Designed comply with GB 18145; GB25501

WARRANTY
- 5 year limited warranty against leaks and drips

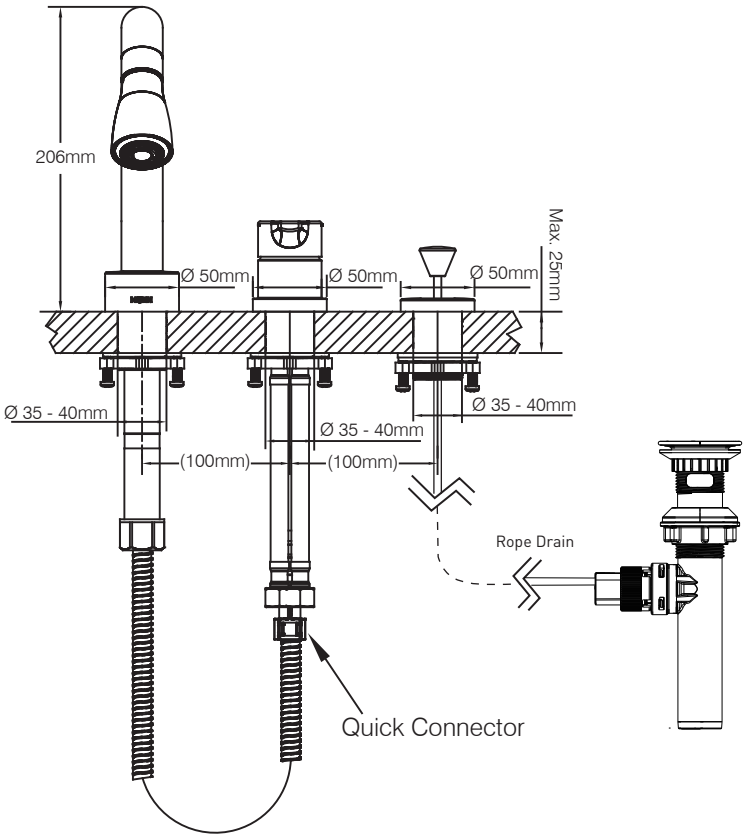

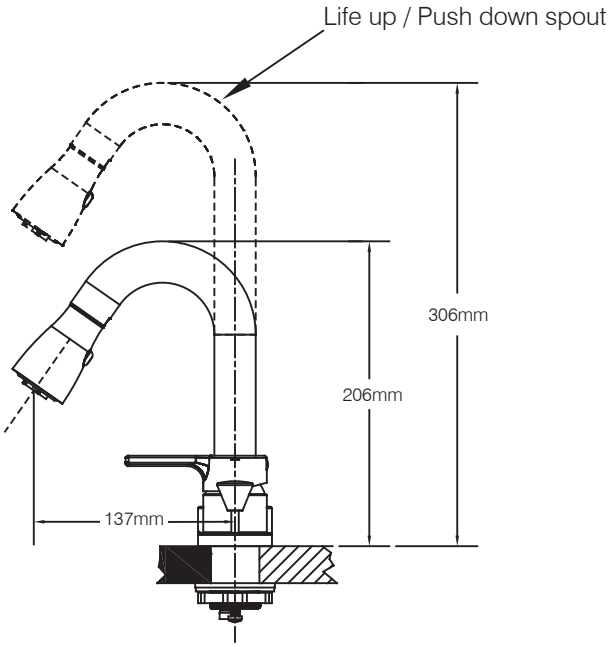

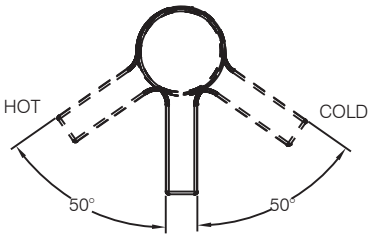

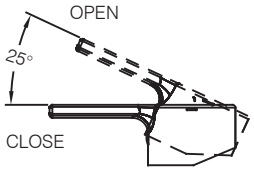

CRITICAL DIMENSIONS DO NOT SCALE

©2021 Moen Incorporated

400-630-8866
www.moen.cn

12/06/2021 SPC22702 S0000495365
Released 1.00