MOEN

# Specifications

## DESCRIPTION

- Metal construction with anodizing finish
- Fit install with the product ACC2403 or ACC2413

## STANDARD

- Comply with QB1560-2006
- Anodizing finish pass AASS 24H grade 10.

## WARRANTY

- 5 years limited warranty except artificial damage and chemicals erosion

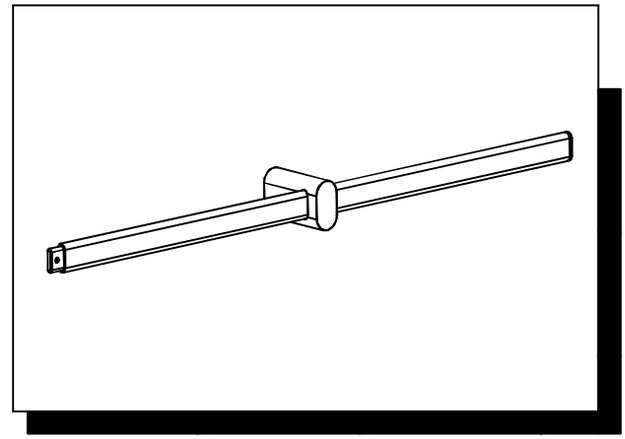

NOTE:ALL DIMENSIONS ARE MM.
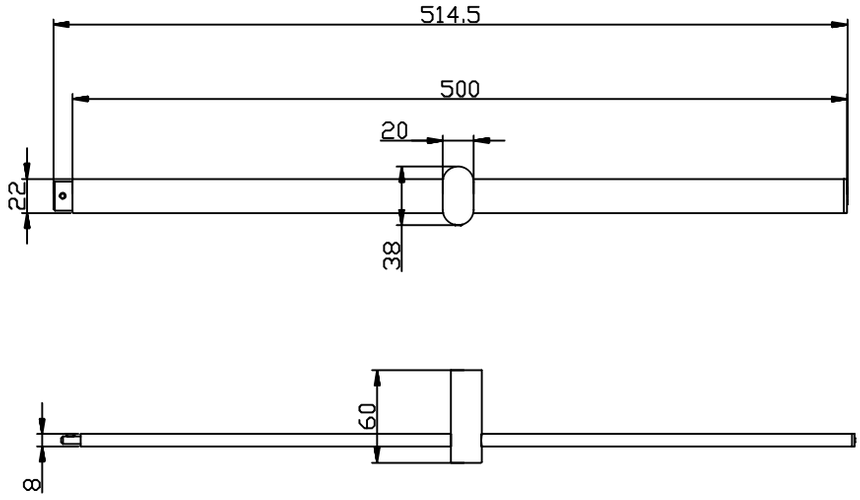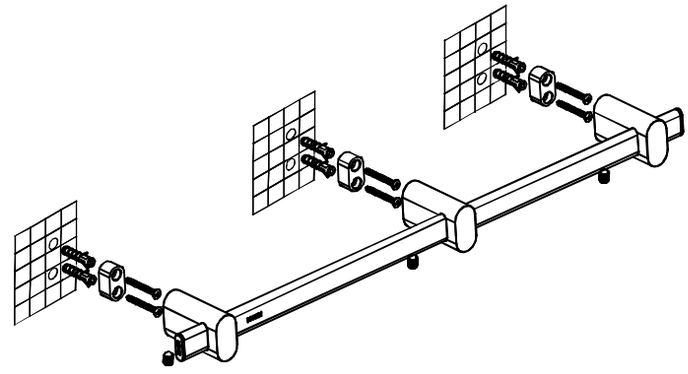
Bath Accessories:Single Towel Bar
Models:ACC2411